快速磁性座虎鉗
QUICK MAGNETIC JAW VISE

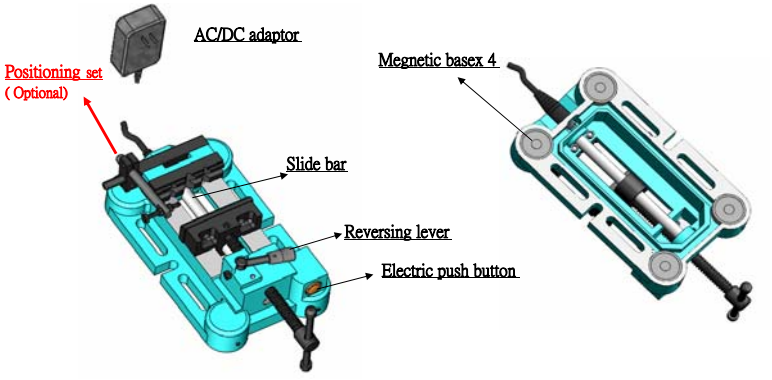

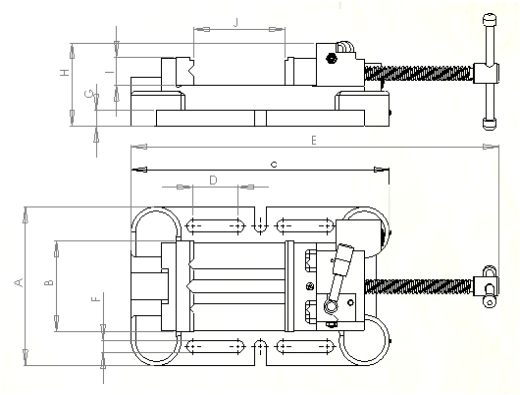

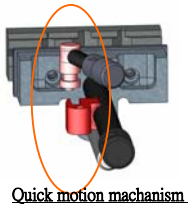
Quick motion machanism

Feature:
- Magnetic base is designed for prostioning the vise on the working table accuractely & promptly
- The Optional position set can help to position work piece promptly & to process the repeated work very accurately
- Suitable for clamping work piece on drill press machine or millling machine
- Quick motion machanism design makes clamping and releasing work piece promptly by sweveling the reversing lever.
- Slide bar design makes work piece is firmly fixed by jaw pair without any inclined situation of the jaws
- Designed with solid strucure, main body is made of FC15, assemble a pair of heat treated steel jaws with hardness HRc 45°~50°
- Jaw pair and handle are surface treated by black oxide finish
- Front fixed prismatic jaw with cross V-grooves is designed for clamping work piece firmly in both vertical & horizontal directions.
- For 103M-4G:
  All sliding suraces of each part, base face & jaw pair are grinded for assuring the flatness as well as the verticalness are controlled in 0.05/100 mm accuracy.

Electrical applied: 100~240 volt AC, CE approval certificate no. 194613

Unit: mm

Order No.	Description	A	B	C	D	E	F	G	H	I	J(Min.)	Max. clamping force (ton)	weight
103M-4	4" quick magnetic jaw vise	181	104	300	52	442	14	18	95	32	105	1.0	10
103M-4G	4" quick magnetic grinding jaw vise	181	104	300	52	442	14	18	95	32	105	1.0	10
103M-A	Positioning set accessory for 103M												